VARSITY SPORTS LOCKER

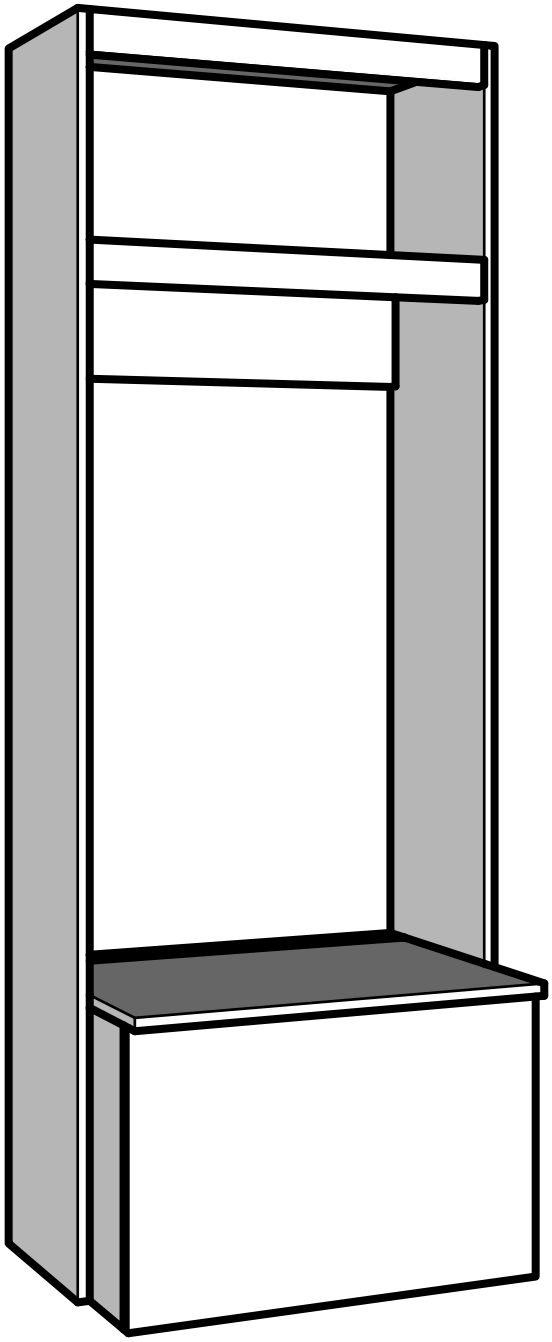

32x SCREW 1 1/4

25x SCREW 1/2

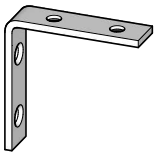

4x ANGLE BRACKETS

21x SCREW CAPS

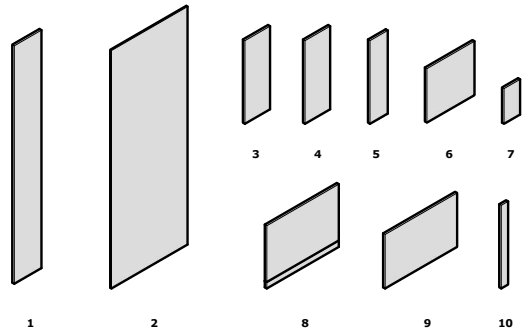

1. 2x SIDE PANEL
2. 1x BACKING
3. 1x TOP SHELF
4. 1x BOTTOM SHELF
5. 1x SHELF SUPPORT
6. 2x SEAT SUPPORT
7. 2x SHELF SPACER
8. 1x SEAT PANEL
9. 1x BACK PANEL
10. 2x SHELF TRIM

1 SIDE PANELS

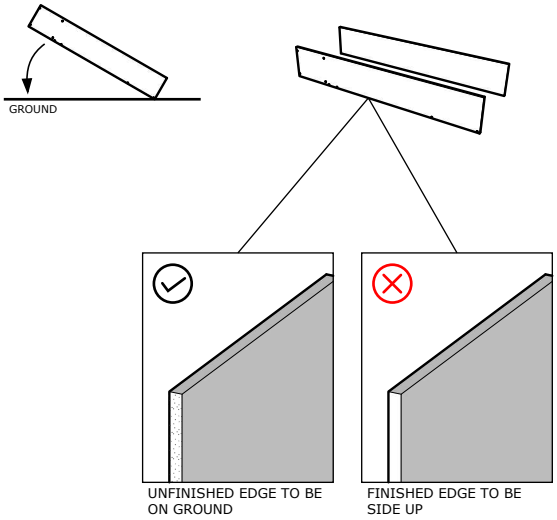

2 TOP SHELF

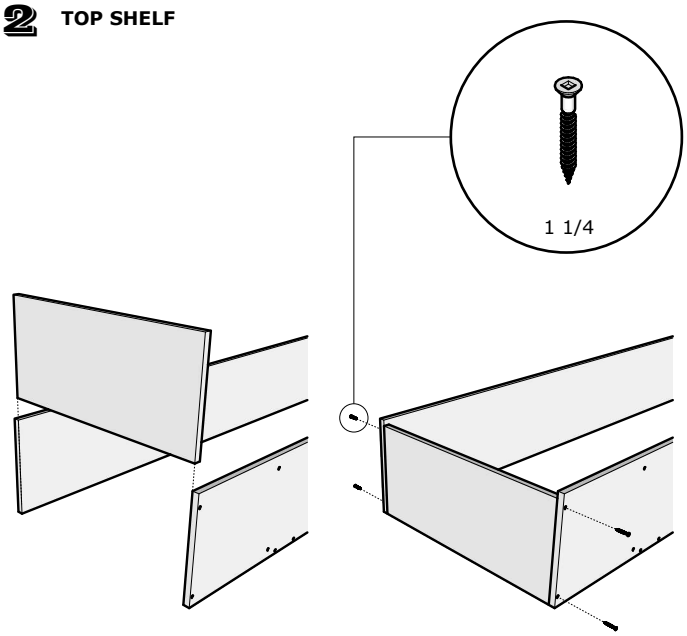

3

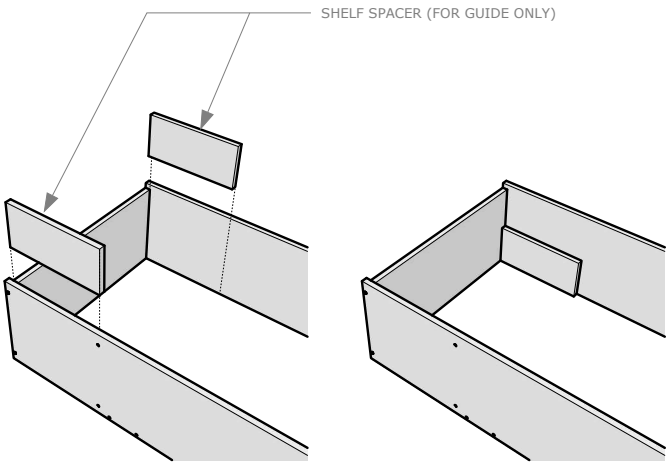

4 BOTTOM SHELF

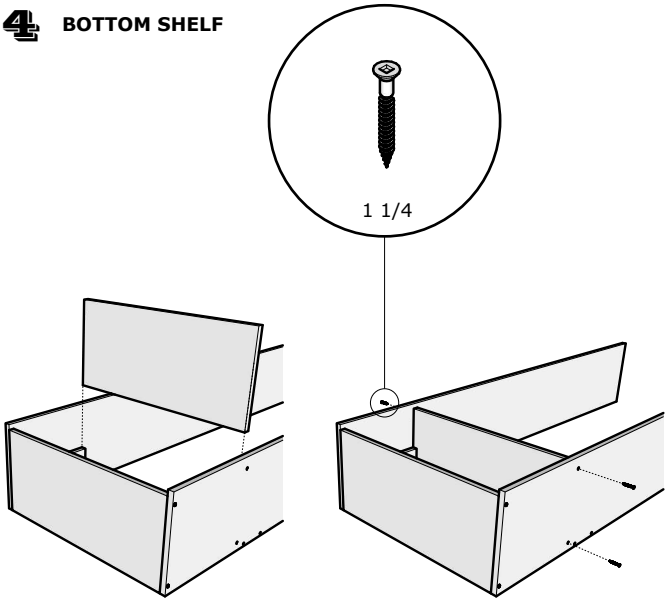

5

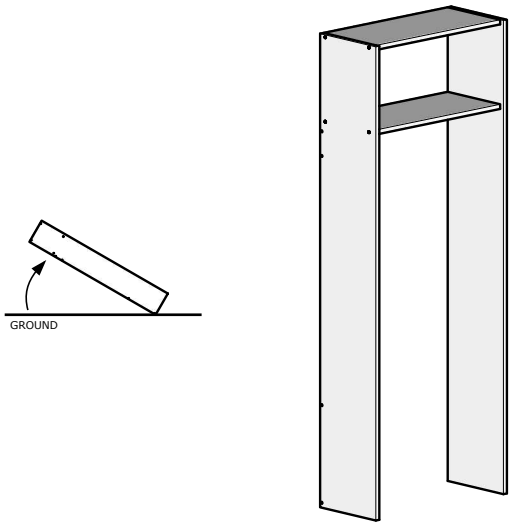

6 SHELF SUPPORT

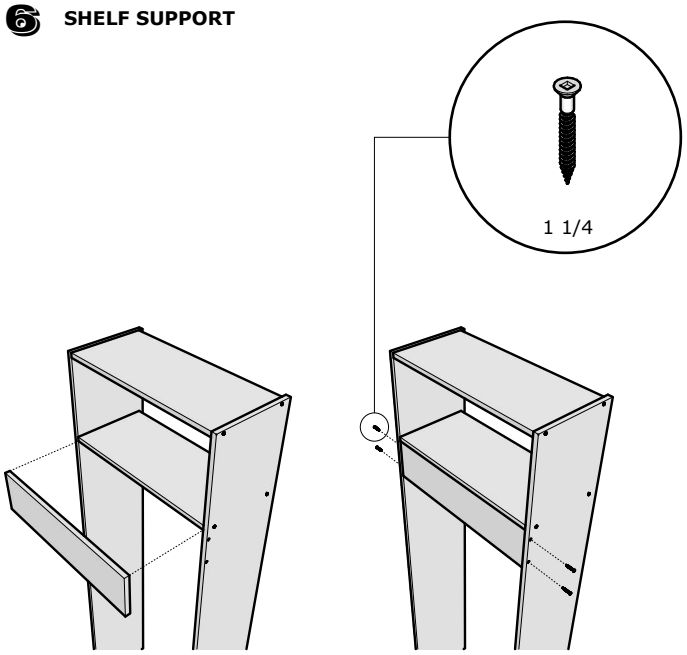

7 BACK PANEL

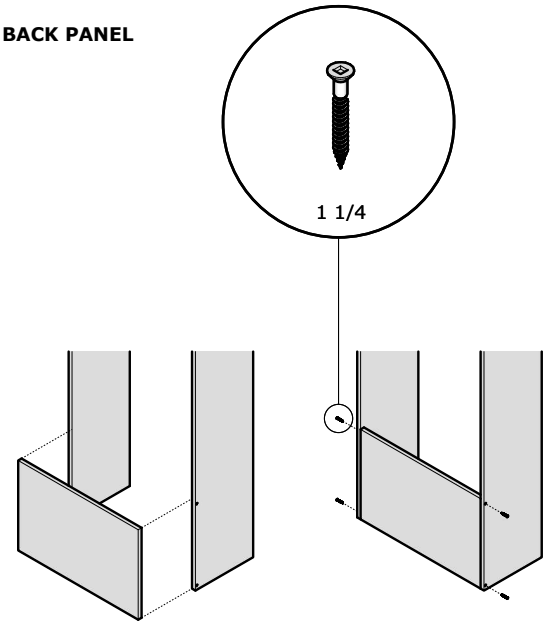

8 SEAT SUPPORT

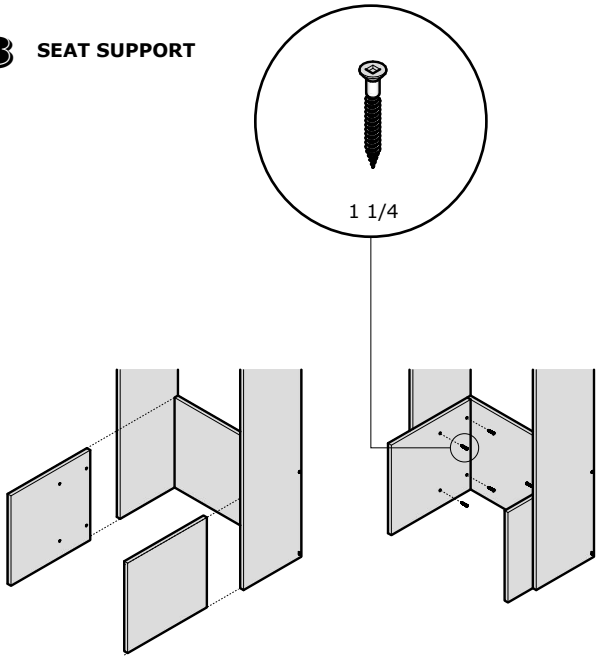

9 FRONT PANEL

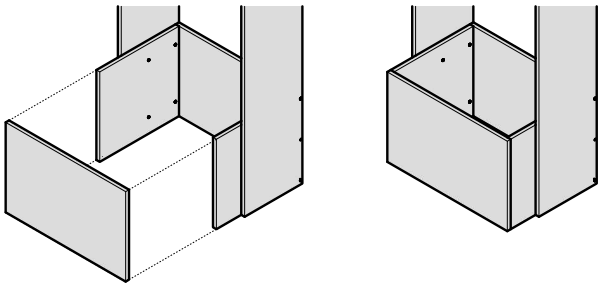

10

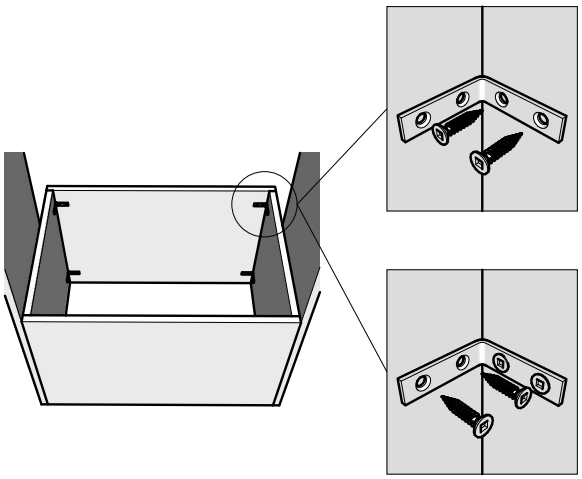

11 SEAT PANEL

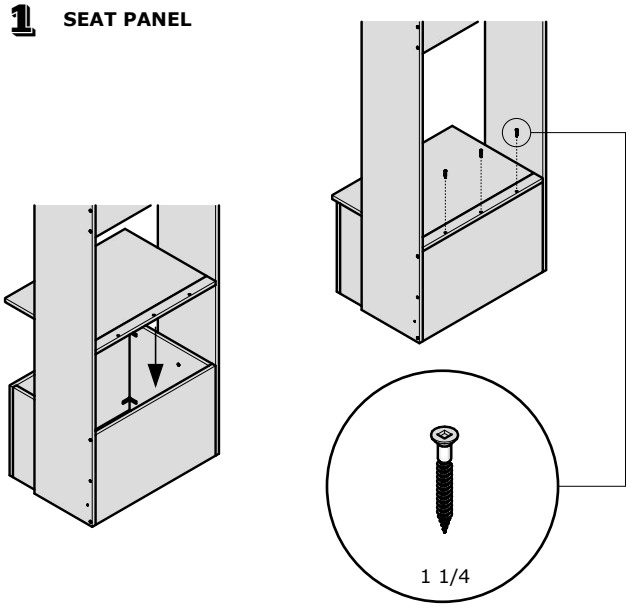

12 SHELF TRIM

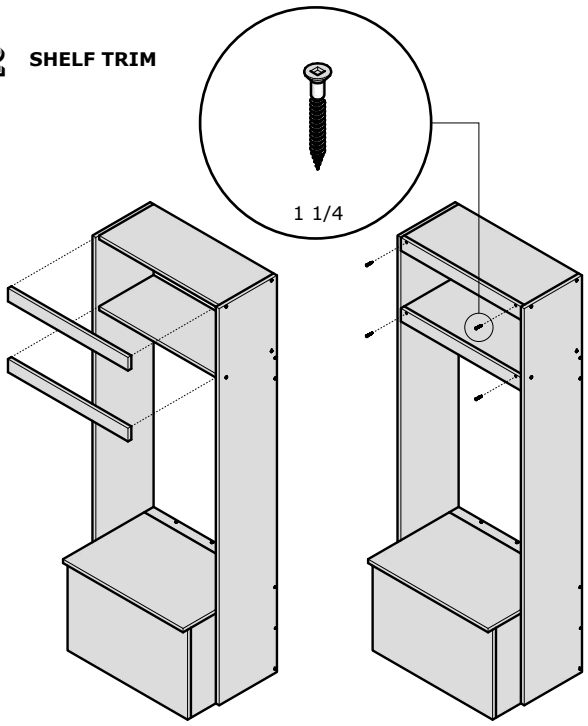

13

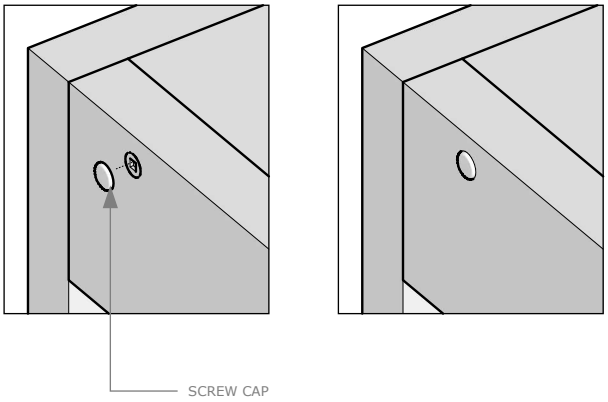

14

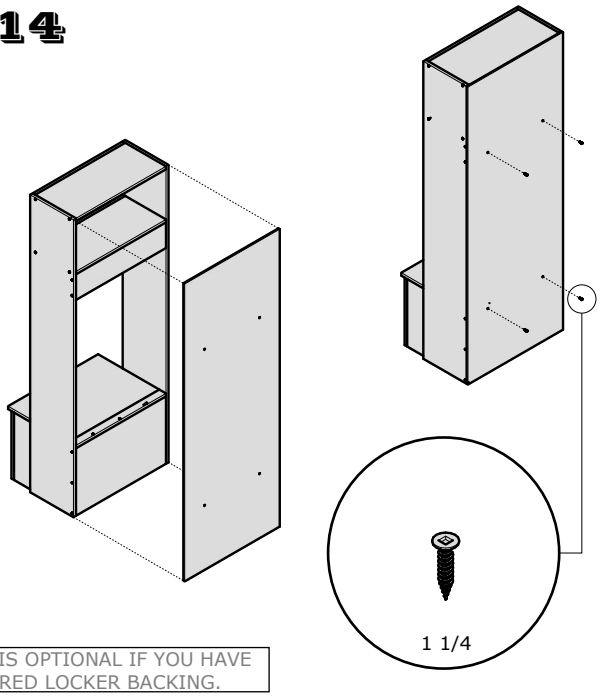

THIS IS OPTIONAL IF YOU HAVE ORDERED LOCKER BACKING.